List of things that can be done to encourage concessionaires and outgrantees to promote water safety

- Share water safety promotional products to give to the public and other resources like pavement stencils, banners, etc.
- Send memo to concessionaires/outgrantees that is signed by the District Chief of Operations, Chief of Real Estate, and Commander that encourage partnering with USACE to promote water safety. An example from the Tulsa District is Attachment 1.
- During real estate inspections, have a USACE staff member such as a park ranger present to discuss water safety outreach needs. Ask if equipment on rental vessels is checked on a regular basis to ensure it is in good condition. If necessary, inspect the equipment.
- Encourage life jacket wear when renting any type of vessel.
- Before someone rents a vessel or takes a vessel out on the water, have them watch a short water safety video and/or go over a safety checklist with them. Videos and checklists for different types of vessels are available at www.rentalboatsafety.com.
- Encourage lifesaving equipment be provided on docks and in other areas that is available for use by employees and public. i.e. https://us.glasdon.com/downloads/brochures/glasdon-us-guardian-life-ring-cabinet-buyers-guide-gw412.pdf This company offers personalization options for decals too.
- Share USACE public recreation fatality trends and data. This information is available on the NRM Gateway in the water safety section under water safety program statistics. https://corpslakes.erdc.dren.mil/employees/watersafety/stats.cfm
- Encourage concessionaires/outgrantees to provide general water safety training to their employees. A resource created by the USACE National Water Safety Program that can be used for the training can be found on the NRM Gateway at this link. https://corpslakes.erdc.dren.mil/employees/volunteer/pdfs/2025-Basic%20Water%20Safety%20Training%20for%20Employees%20and%20Volunteers.pdf
- Host annual pre-recreation season meeting to brief on water safety products, programs, initiatives, etc. and provide USACE public recreation fatality trends and data. Also, general water safety training for employees and volunteers can be conducted in conjunction with this meeting.
- Include concessionaires and outgrantees in water safety task force group meetings or anything similar to that.
- Ask concessionaires and outgrantees if they have not already done so to consider making their swim beaches and boat ramps compliant with EM 1110-1-400 Recreation Facility and Customer Service Standards, especially with the items pertaining to water safety.
- Place water safety information and messages in high traffic areas open to the public.
- Provide short water safety messages that can be placed on electronic message boards, business signs, etc.
- Share information about social media pages and websites pertaining to water safety and encourage sharing the posts and linking to the websites.

- Share life jacket loaner station information. USACE life jacket loaner program guidelines are available on the NRM Gateway at this link https://corpslakes.erdc.dren.mil/employees/watersafety/pdfs/LifeJacketLoanerProgramMemo-Guidelines.pdf. An additional life jacket station design that is not included in the guidelines is Attachment 2. Life jackets for loaner stations are available from different sources. One source is the Sea Tow Foundation, https://www.boatingsafety.com/page/life-jacket-loaner-program. Always remember to inspect the loaner life jackets regularly to ensure they are in good condition. Another idea is to conduct a life jacket drive similar to a coat drive to collect life jackets that are in good condition. Incorporate a "fill the boat with life jackets" during special events or as its own event.

- Ask them to participate in Wear a Life Jacket at Work Day and promote National Safe Boating Week and Operation Dry Water. Resources for Wear a Life Jacket at Work Day and National Safe Boating Week can be found at https://safeboatingcampaign.com/resources/national-safe-boating-week-toolkit/ and resources for Operation Dry Water can be found at www.nasbla.org/operationdrywater/home.

- Ensure that marina concessionaires and others are in compliance with the National Electric Code Article 555 pertaining to Marinas, Boatyards, Floating Buildings, and Noncommercial Docking Facilities. For more information regarding this here is a link to a blog from the National Fire Protection Association (NFPA), https://www.nfpa.org/news-blogs-and-articles/blogs/2024/04/29/making-your-marina-safe-for-summer. Share information about electrical shock drowning with marina concessionaires and others. Information about electric shock drowning can be found at www.electricshockdrowning.org.

- Partner together to promote water safety at events and conduct water safety events on-site such as hands-on boating experiences for the public. For example, paddle safety education programs and life jacket fitting demonstrations.

- Ask if USACE employees and volunteers can conduct roving interpretation to promote water safety at facilities managed by concessionaires and outgrantees. An example would be to take Bobber the Water Safety Dog and provide water safety information and photo op opportunities with Bobber to the public. Coordinate when and where the roving interpretation will be conducted with the concessionaire/outgrantee.

- Provide contact information for partners that might be willing to help promote water safety such as Safe Kids USA, U.S. Coast Guard Auxiliary, US Power Squadrons (America's Boating Club), local family foundations with Waves of Hope, www.safeboatingcouncil.org/wavesofhope, and Families United to Prevent Drowning, www.familiesunitedtopreventdrowning.org, etc.

- Schedule radio and television interviews that include USACE and concessionaires/outgrantees and a portion or entire interview is about water safety.

- If it is a facility that sells anything ask if they will put a water safety message on the receipt given to the customers. If they sell life jackets, ask them to display how to fit a life jacket properly in the area they display the life jackets for sale. Artwork for the Wear It Right poster can be found on the NRM Gateway at https://corpslakes.erdc.dren.mil/employees/watersafety/graphics/wear-right%20poster%20panel.pdf. Provide copies of the Wear It Right brochures that is provided by the USACE National Water Safety Program to be displayed and handed out to visitors and customers.

Attachment 1

DEPARTMENT OF THE ARMY
U.S. ARMY CORPS OF ENGINEERS, TULSA DISTRICT
1645 SOUTH 101st EAST AVENUE
TULSA, OKLAHOMA 74128-4609

Operations Division
Natural Resources and Recreation Branch

Dear Recreation Partner:

The U.S. Army Corps of Engineers, Tulsa District, administers and oversees the operation of 33 multipurpose lakes and five locks and dams within a three-state region. More than 22.5 million individuals visit these projects yearly and many recreate at your facilities. The opportunities that you provide attract a wide range of users and we appreciate your commitment in this effort.

In 2012, my predecessor, Colonel Michael Teague, requested your help with education of our visitors about water safety following an increase in the number of accidents and water-related recreational fatalities. With efforts from you, Tulsa District staff and many other valued partners, we saw the number of fatalities decrease from 35 in 2011 to 16 in both 2012 and 2013.

We are asking for your continued help in educating our visitors about practicing safety while recreating at our lakes and rivers. I have charged our Chief of Operations and Chief of Real Estate to work with you and provide whatever assistance you may need in order to prevent water-related recreational fatalities. The signing of this letter indicates our collective commitment to this effort, and we hope that you will join us.

In the coming weeks, lake managers, real estate specialists and park rangers will be in contact with you and will provide you with information on how, together, we can continue to inform the recreating public on ways to be safer when on or around the water. Water safety handouts, flyers, and educational materials are available for your use, just let us know and we will get them to you.

For further information concerning this effort, feel free to browse the Tulsa District Home Page www.swt.usace.army.mil and look for the water safety link under the recreation tab. While there, check out the links to our Social Media sites (Facebook, Twitter, YouTube and Flickr) where we share safety messages with the public. If the internet is not for you, feel free to visit or call your local Corps of Engineers Lake Office. With your assistance, we can provide a healthier, safer experience for our visitors.

We look forward to working with you on this very important initiative.

Earl Groves
Chief, Operations Division

Terry Rupe
Chief, Real Estate Division

Colonel Richard A. Pratt
Commander, Tulsa District

Attachment 2

Life Jacket Loaner Station Plans

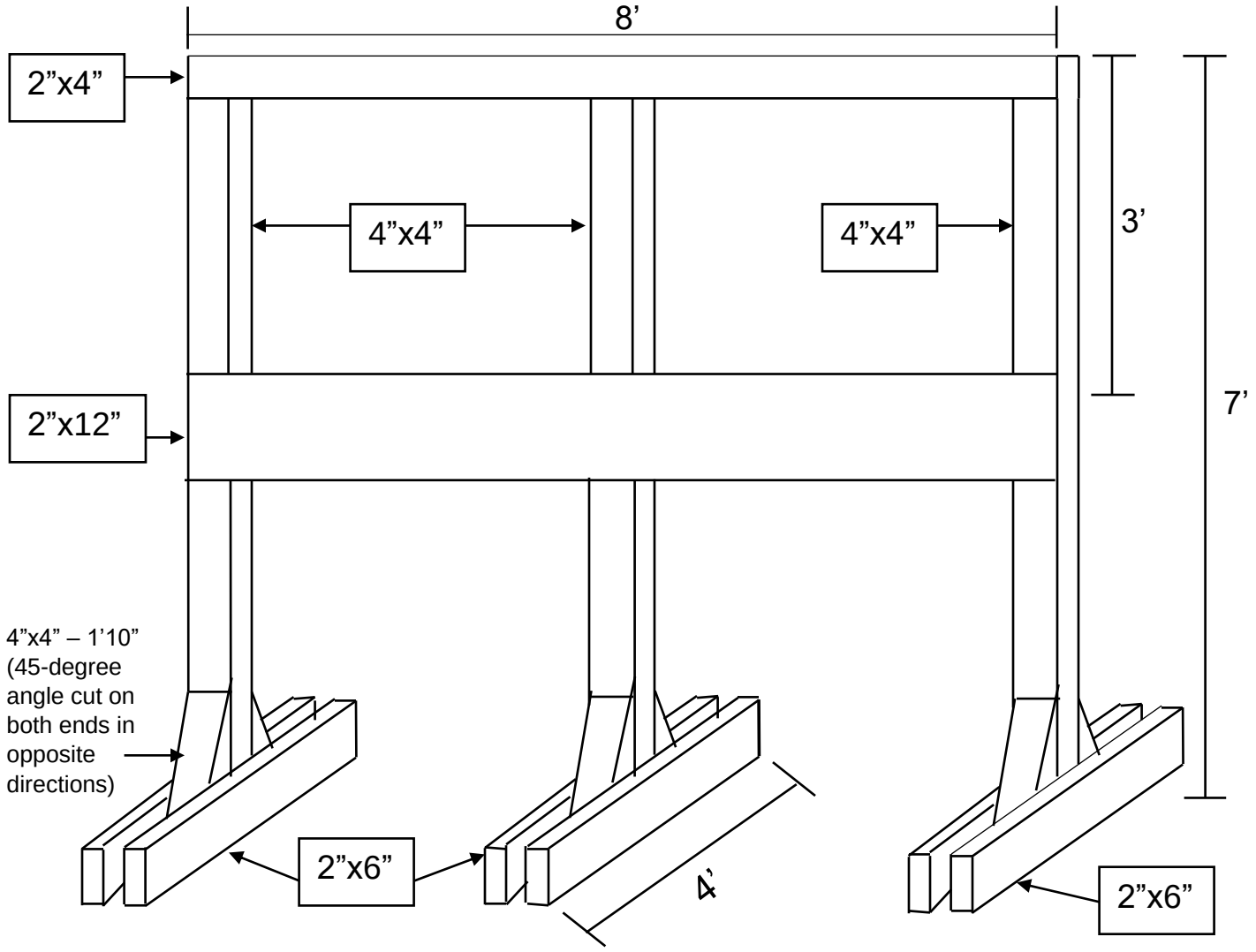

Material List

1: 2” x 4”x 8’

6: 2” x 6” x 4’

1: 2” x 12” x 8’

3: 4” x 4” x 7’

6: 4” x 4” x 1’10” (45-degree angle cuts on both ends in opposite direction)

Several – 3½” deck screws

10: 7” ladder hooks and 1½” deck screws

2: 3’ x 4’ Life Jacket Loaner Station Interpretive Panels

1: 6” x 8’ Partner Recognition Panel

For Ground Installation replace the six 2”x6”x4’s and six 4”x4”x1’10”s with three 4”x4” wood post anchors. If installing on concrete use three 4”x4” fence post base brackets.
Link to wood post anchor video: https://www.youtube.com/watch?v=SE3PKWU4at8
Link to how to install fence post base bracket onto concrete: https://www.youtube.com/watch?v=JMZLK_B5k3g

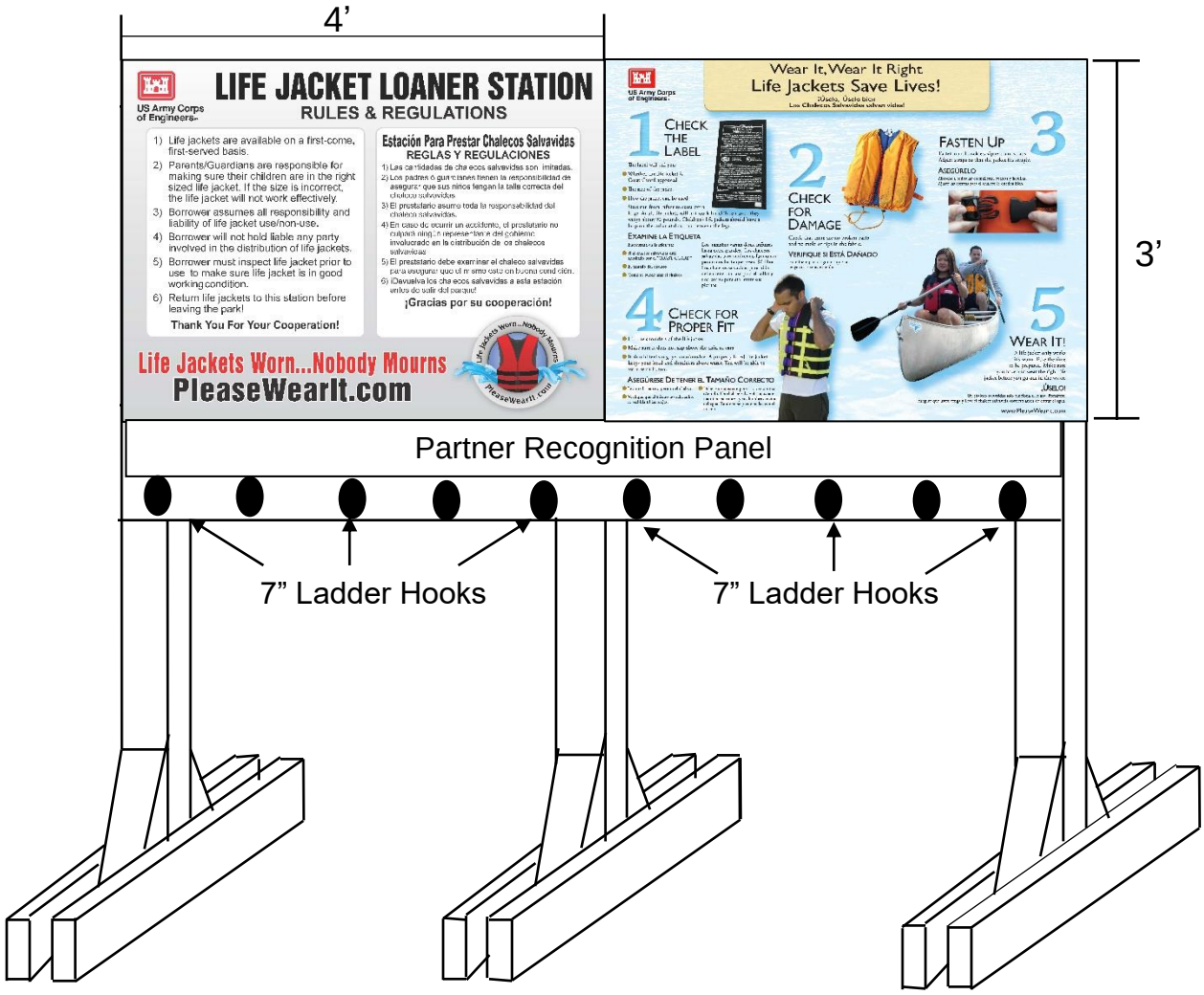

Artwork for Life Jacket Loaner Station Interpretive Panels is available by emailing water.safety@usace.army.mil

Pictures for reference of wood post anchor and bracket for ground installation:

4” x 4” wood post anchor

4” x 4” fence post base bracket

Example of ladder hook that can be used.