GATEHOUSE

Index of Drawings:

Sht 1 - Floor Plan
Sht 2 - Electrical Plan
Sht 3 - Floor Covering Schedule
Sht 4 - Elevations
Sht 5 - Elevations
Sht 6 - Cabinet at Desk
Sht 7 - Counter
Sht 8 - Counter Details
Sht 9 - Counter Details
Sht 10 - Slab Layout

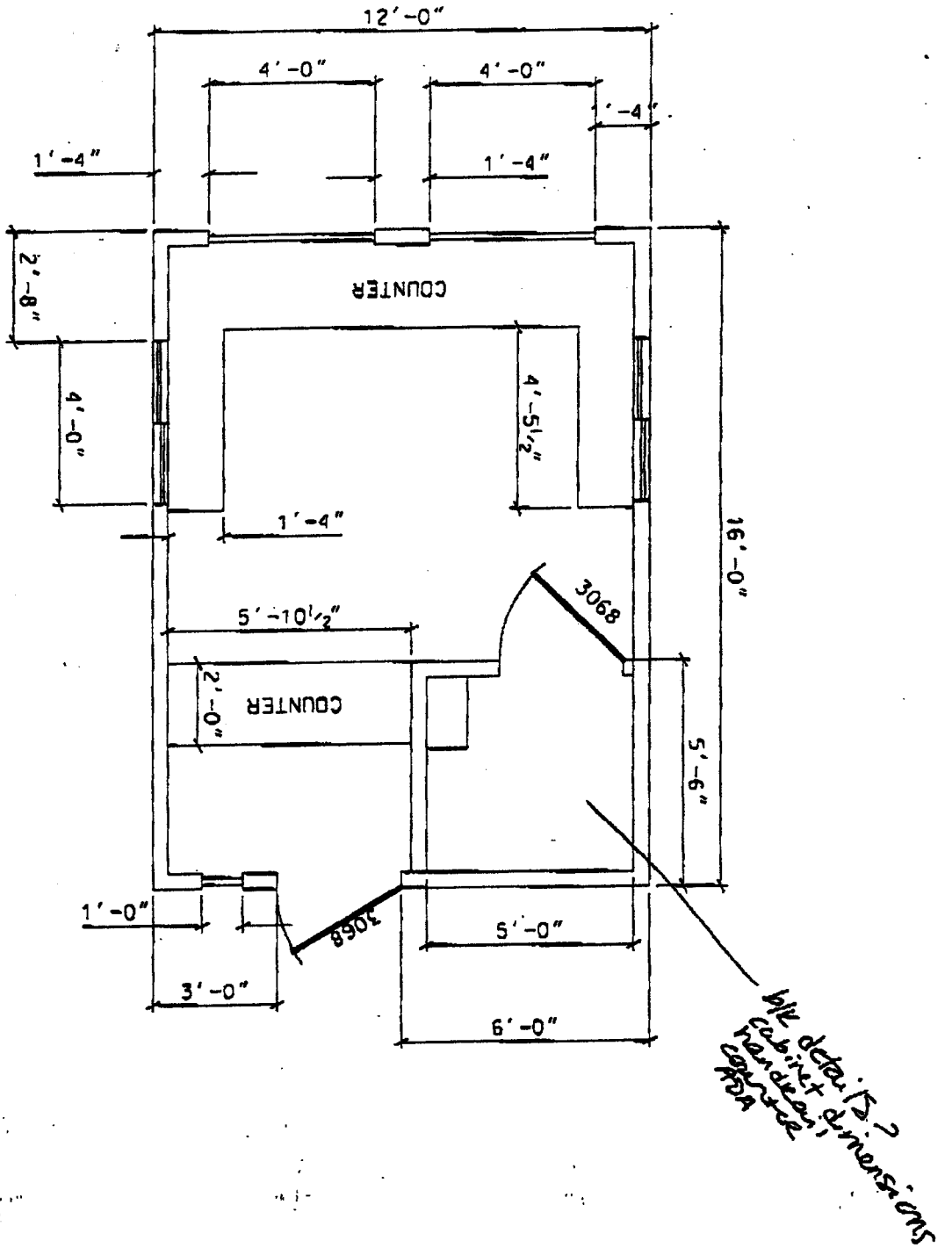

GATEHOUSE
Floor Plan
Scale ¼" = 1'
Sht 1

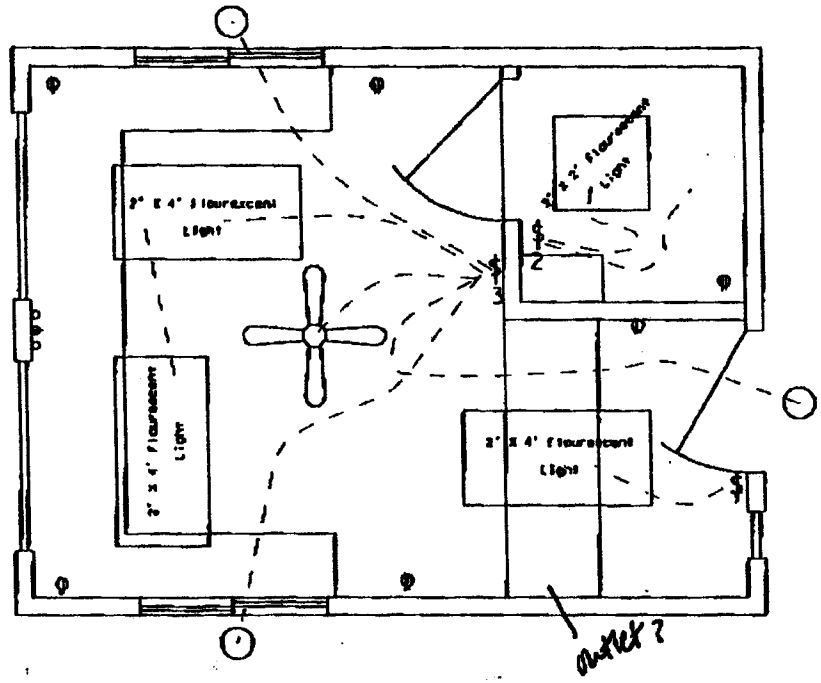

Receptacle
Telephone
Switch

Note:
Exact location of lights will be determined at time of installation

GATEHOUSE
Electrical Plan
Scale ½" = 1'
Sht 2

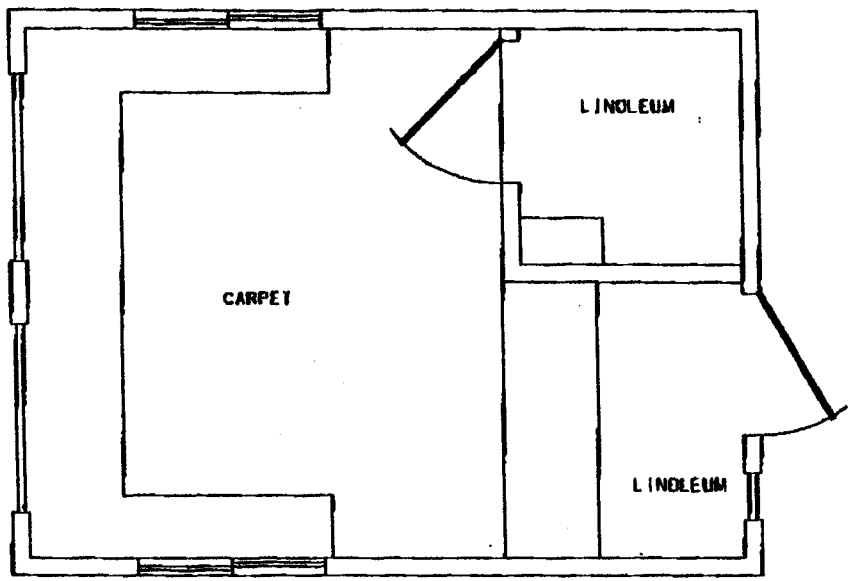

GATEHOUSE

Floor Covering Schedule

Scale 1/4" = 1'

Sht 3

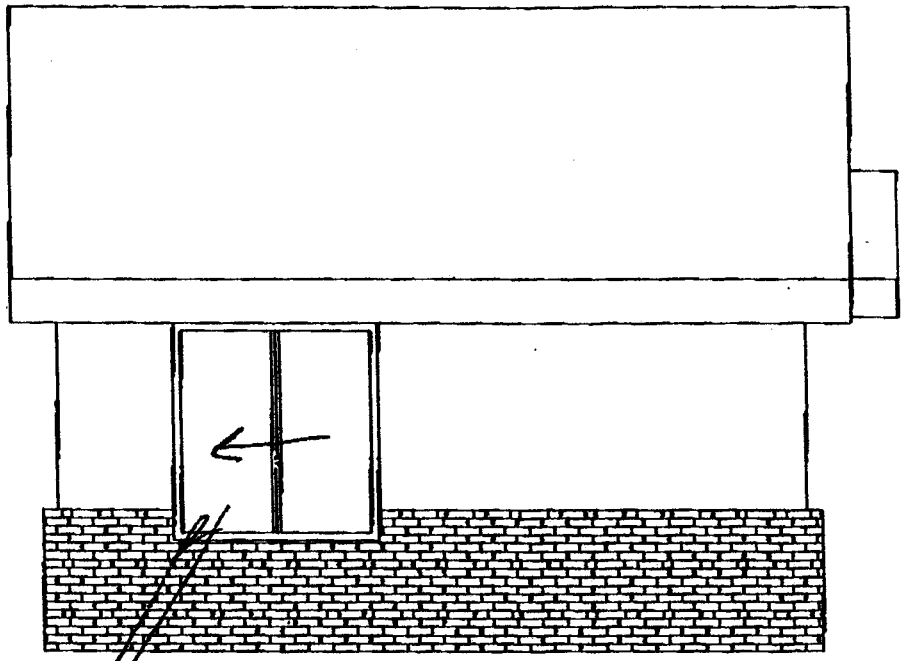

Side Elev

sliding windows & screens

exterior details? gutters siding

GATEHOUSE
Elevations
Scale 1/4" = 1'
Sht 4

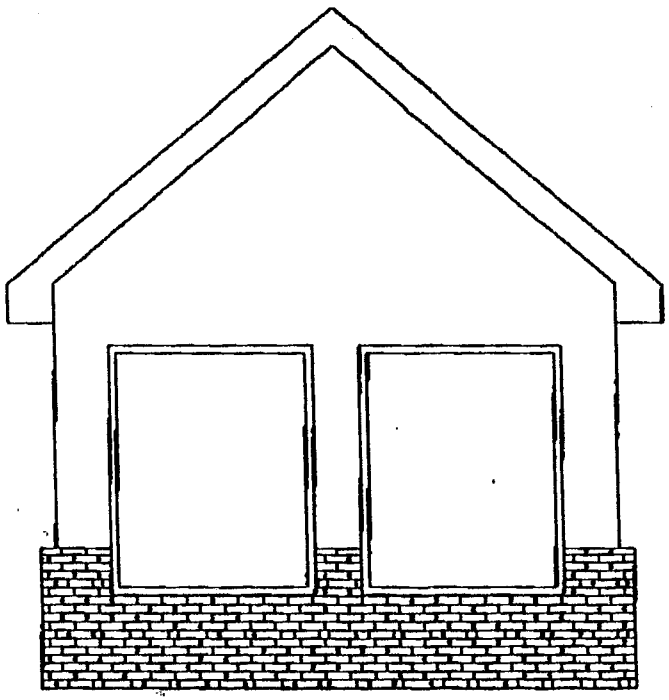

Front Elev

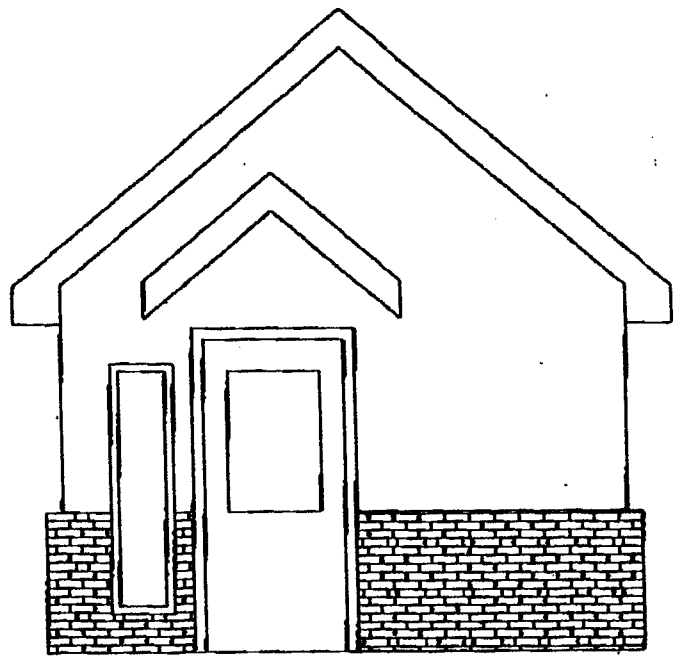

Back Elev

GATEHOUSE
Elevations
Scale 1/4" = 1'
Sht 5

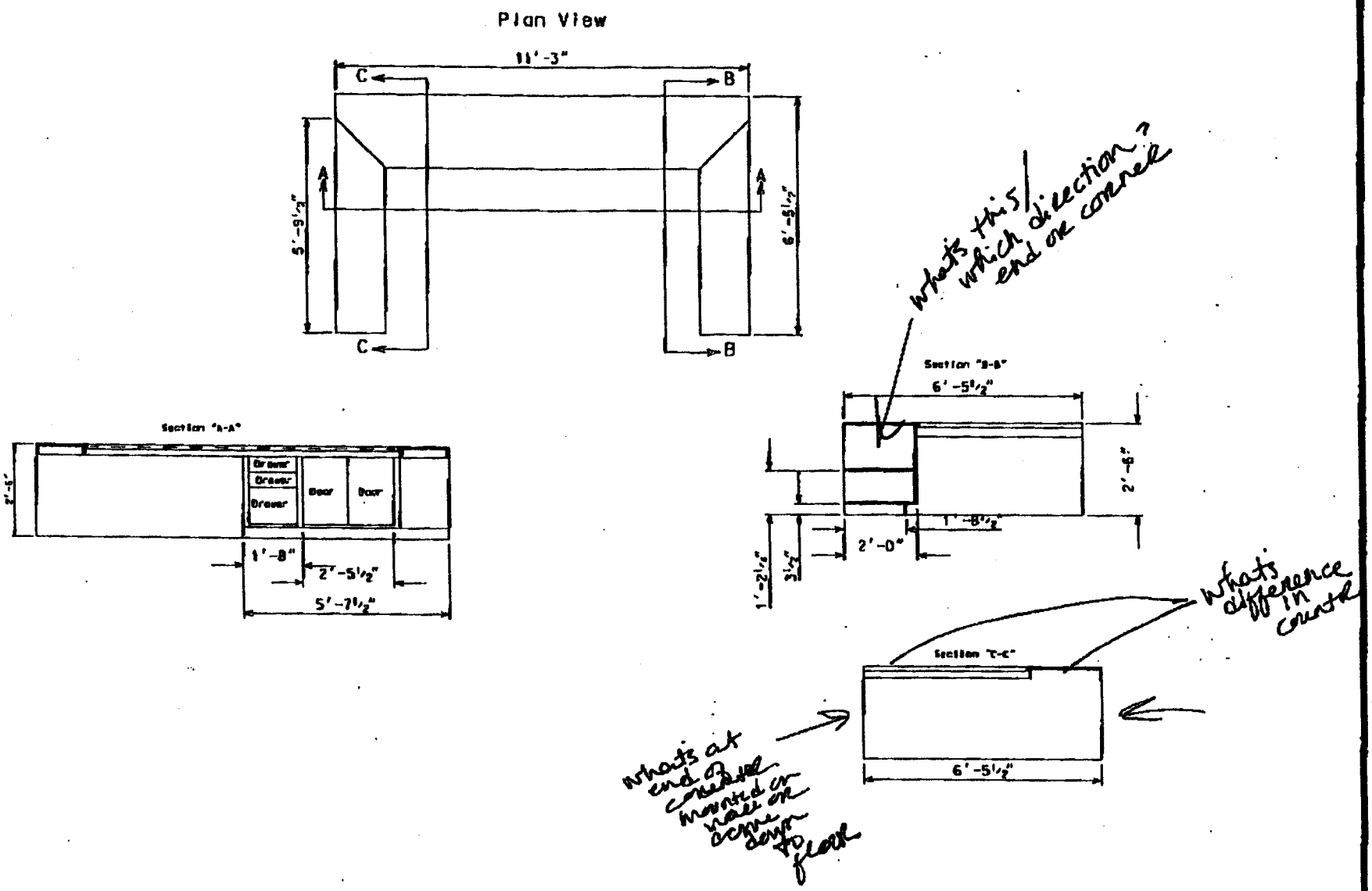

GATEHOUSE
Cabinets at Desk
Scale ¼" = 1'
Sht 6

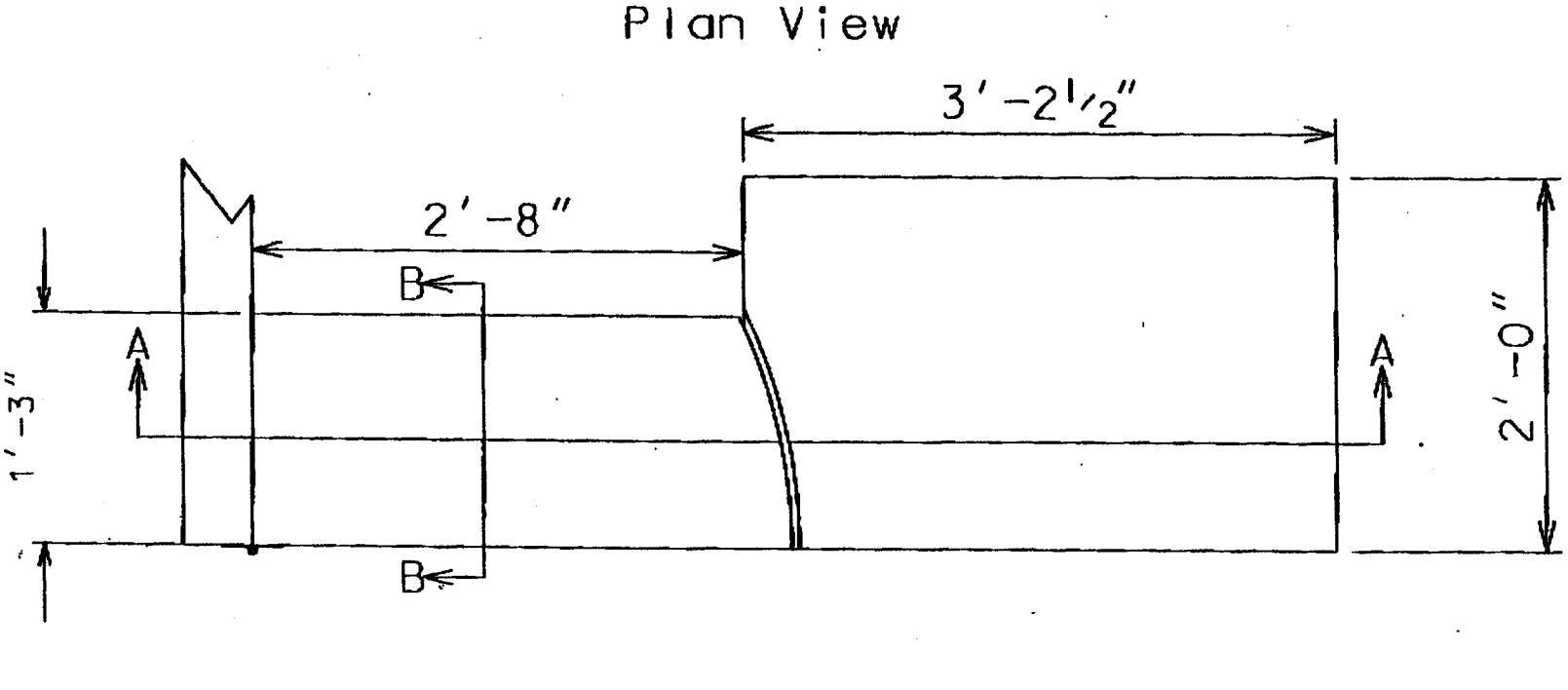

Gatehouse	
Counter	
Scale 1"= 1'	Sht 7

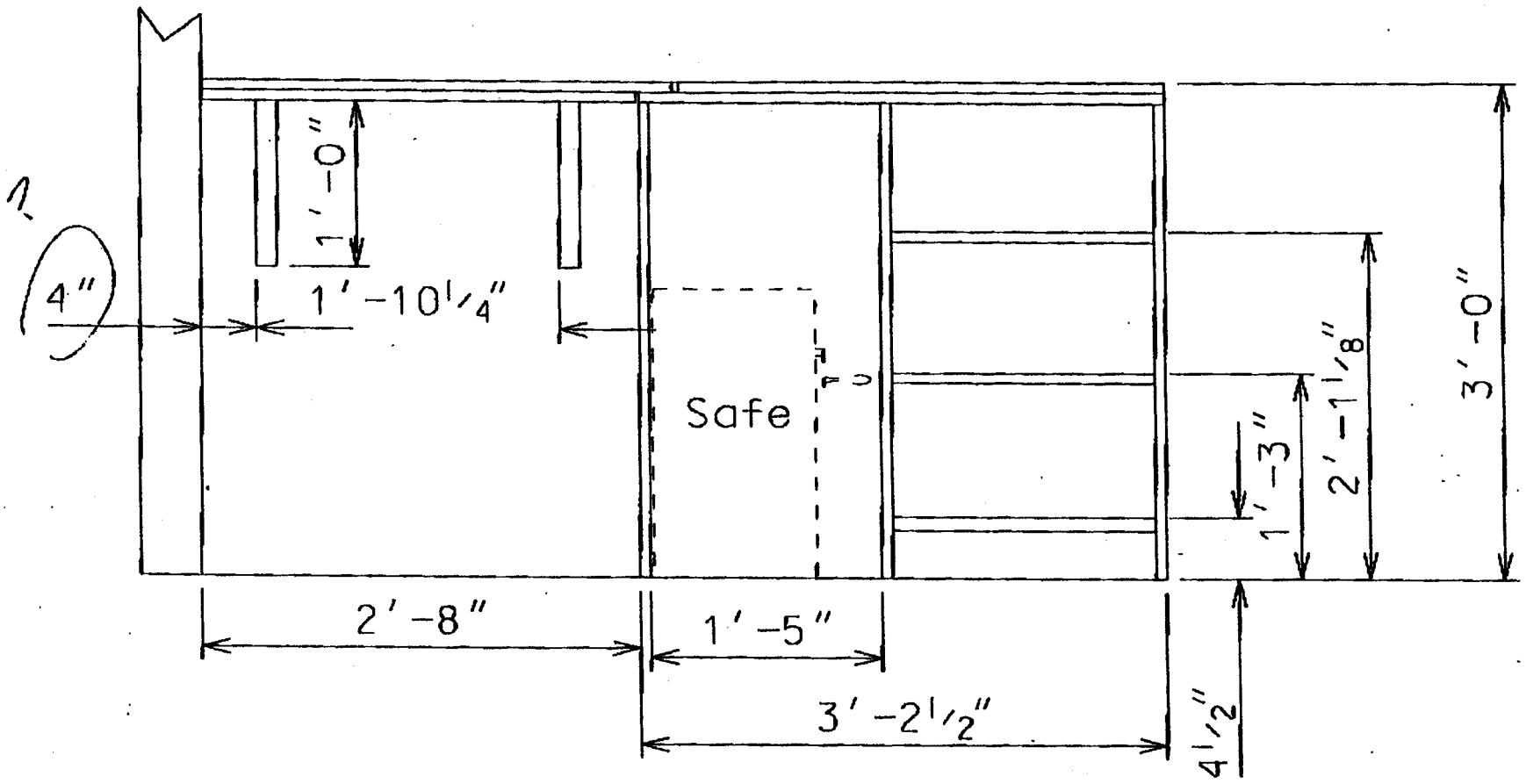

Section 'A-A"

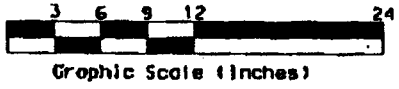

Gatehouse
Counter Details
Scale 1" = 1' Sht 8

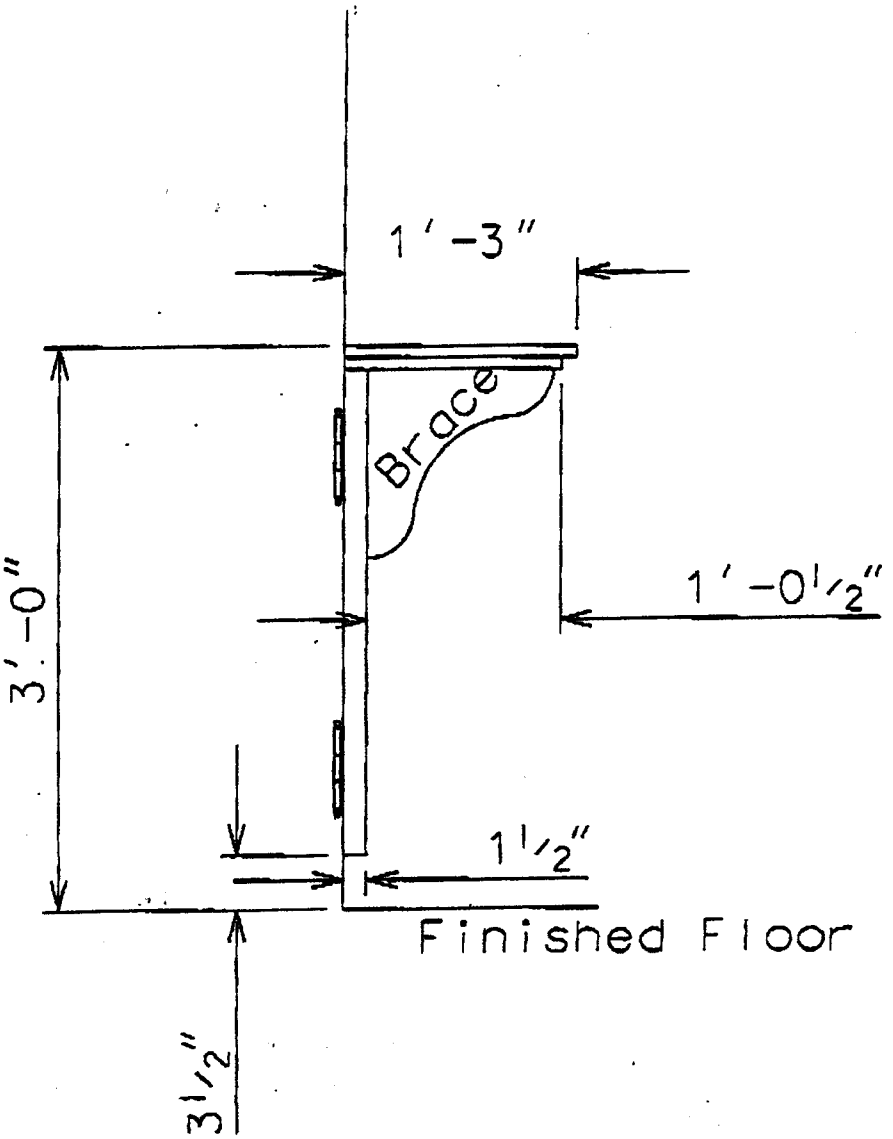

Section "B-B"

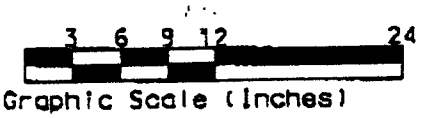

GATEHOUSE
Counter Details
Scale 1" = 1' Sht 9

Concrete Slab Layout

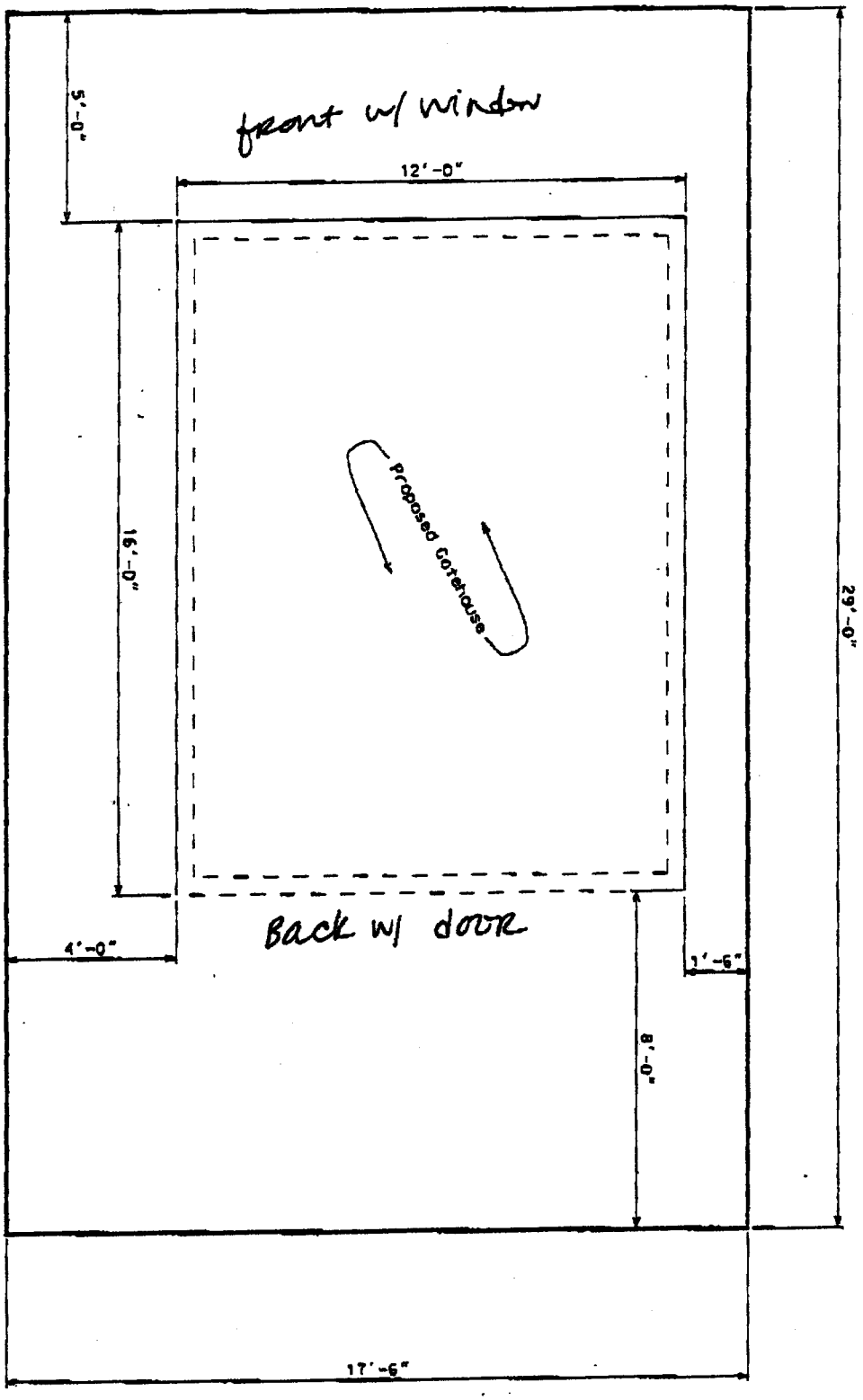

directional signs?

GATEHOUSE
Slab Layout
Scale 1/4" = 1'
Sht 1 of